RELIABILITY BUILT IN™

Utility and iLine *Mini-Brochure*

NEW PRODUCTS Inside!

FAUCETS

iLine by T&S

Smart International Foodservice Solutions

THE utilityline

T&S's NEW Economy Line

T&S RELIABILITY BUILT IN™

NEW EURO MODELS

EX-1DP00-H

Pre-rinse unit, single temperature control

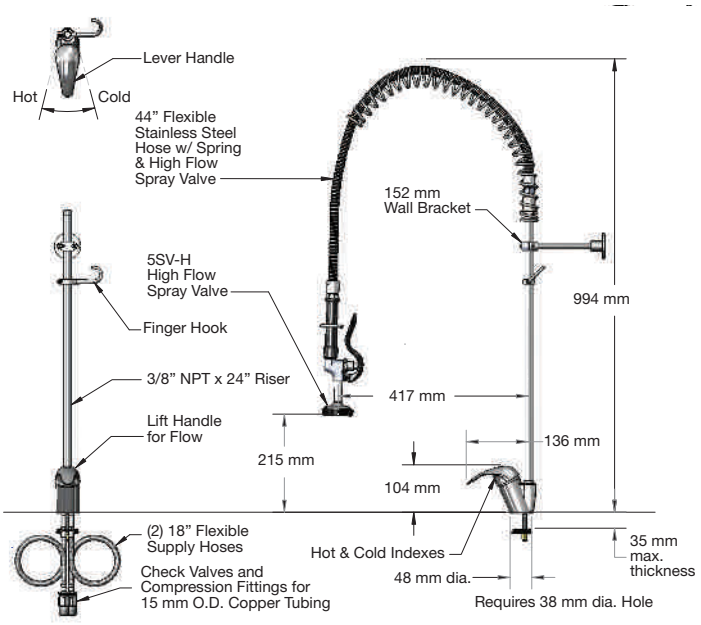

THE utilityline

EX-1DP12-H

Pre-rinse unit, single temperature control, add-on faucet

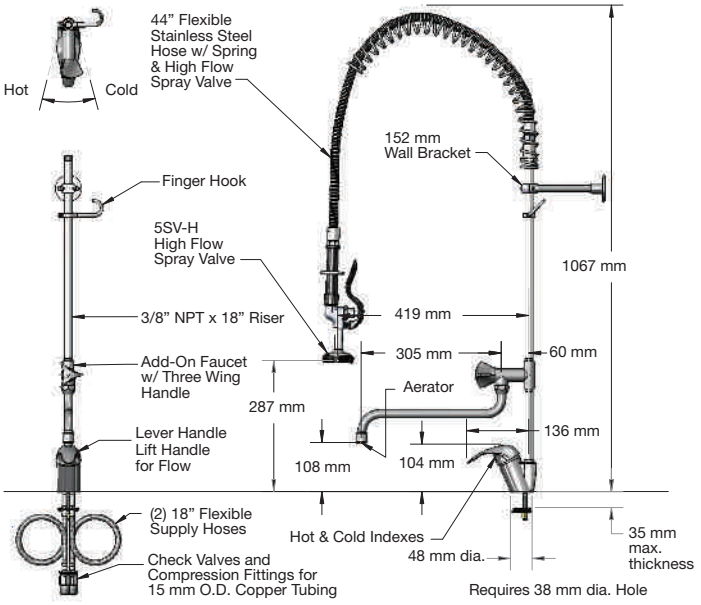

NEW EURO MODELS

EX-6WP12-H

Pre-Rinse Unit, single temperature control, wall mounted base faucet, 307 mm add-on faucet

THE utilityline

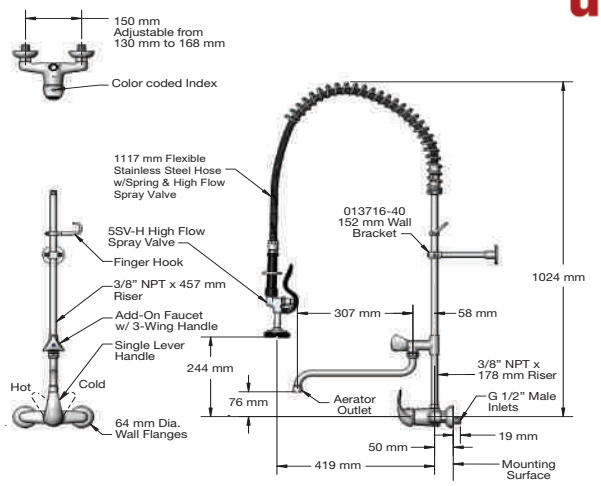

EX-1DMP06-H

Compact pre-rinse unit, single temperature control, 152 mm add-on faucet

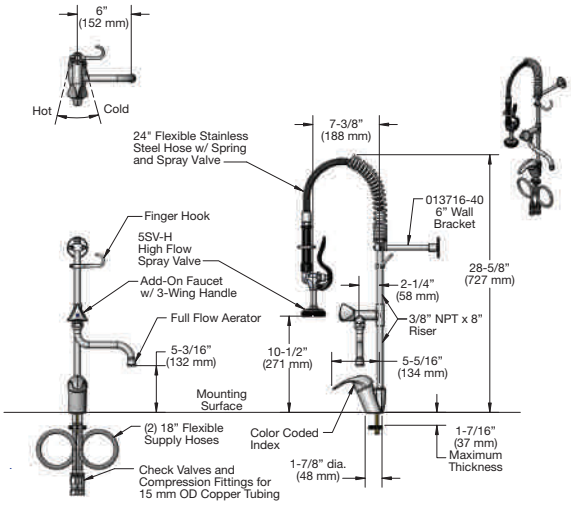

NEW!

THE utilityline

EX-1DMP08-H

Compact pre-rinse unit, single temperature control, 203 mm add-on faucet

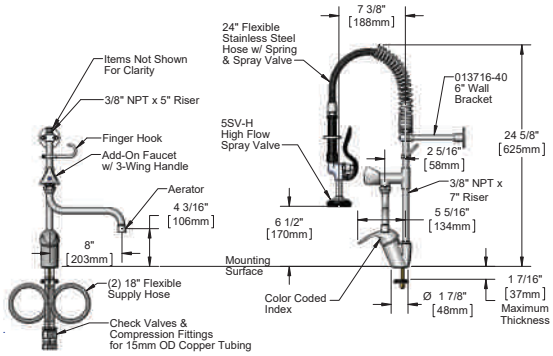

T&S RELIABILITY BUILT IN™

NEW EURO MODELS

Smart International Foodservice Solutions

EA-1DF09-LH

Deck mount faucet with long single lever handle, 230 mm swivel nozzle

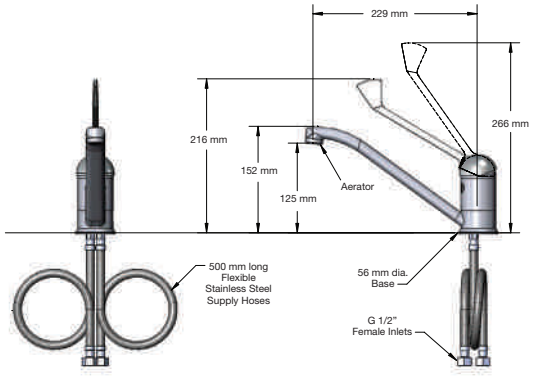

14.76 L/min Flow Rate

iLINE by T&S

EA-2DF12

Single lever base faucet with 305 mm (12") swing nozzle and aerator and 3-wing handles

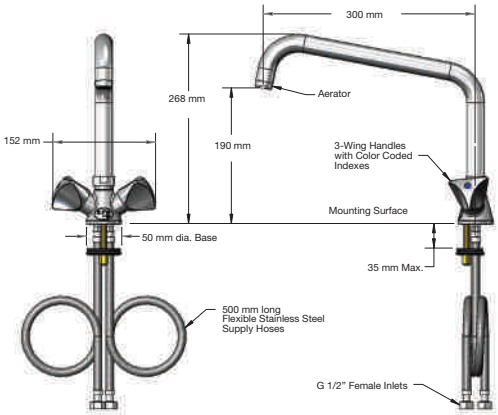

14.34 L/min Flow Rate

iLINE by T&S

EA-2DF12-150

Single lever base faucet with 305 mm (12") swing nozzle and aerator and 3-wing handles; 150 mm (5-15/16") clearance

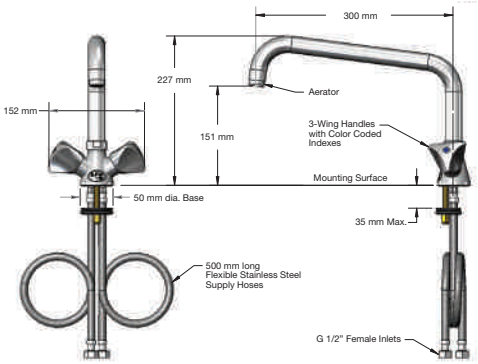

14.34 L/min Flow Rate

NEW EURO MODELS

Smart international Foodservice Solutions

EA-2DF12-300

Single lever base faucet with 305 mm (12") swing nozzle and aerator and 3-wing handles; 300 mm (11-13/16") clearance

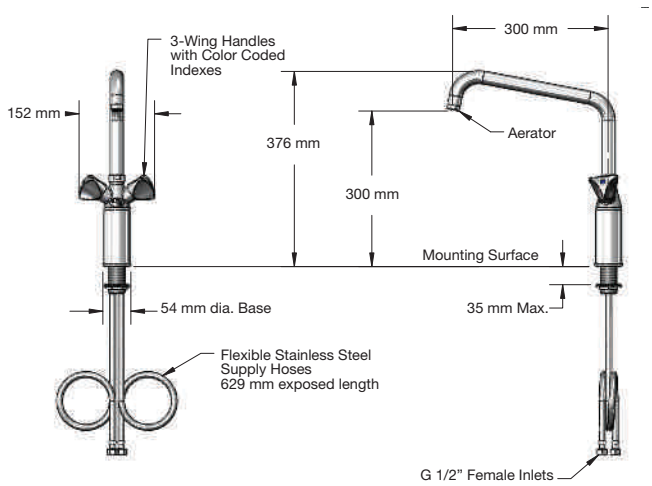

14.34 L/min Flow Rate

iLINE by T&S

EA-6WF08-LH

Single lever wall mount faucet with 204 mm (8") swing spout and long handle

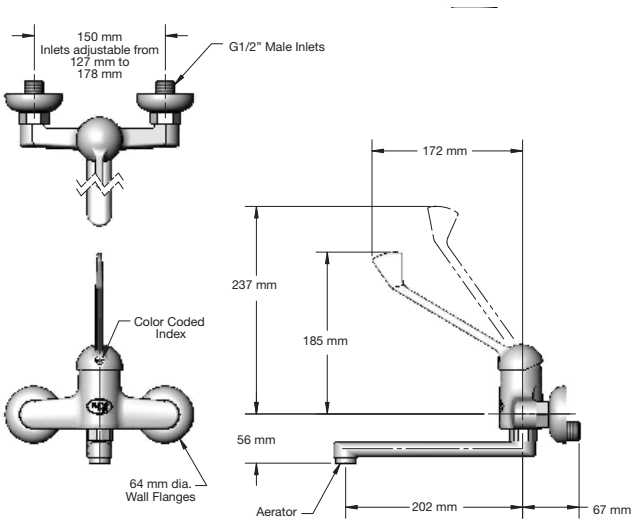

18.17 L/min Flow Rate

iLINE by T&S

T&S RELIABILITY BUILT IN™

RELIABILITY BUILT IN™

www.tsbrass.com

T&S BRASS AND BRONZE WORKS, INC.

For more information, please contact:

Rajesh Chowdhury

Regional Sales Manager – India and the Subcontinent

E-mail: rchowdhury@tsbrass.com

Phone: +91 9 620 777757

Bert Dittmar

Director of Sales EMEA

E-mail: bdittmar@tsbrass.com

Customer Service Hotline: +1 864 834 6715